RF

ORANGE COUNTY AMATEUR RADIO CLUB, INC.

VOL. LXIII NO. 07 | P.O. BOX 3454, TUSTIN, CA 92781 | July 2022

The Prez Sez...

By Nicholas AF6CF

Finally, after a couple of years with limited operations, this year's ARRL Field Day was superb and a good continuation of the "back to normal" for our Club. Thanks to all FD participants for another successful Field Day!. Safe, High Scores, Dignitaries, Local Press and visitors made it a real success. We could not ask for more.

This was a team effort that will not be soon forgotten, and I sincerely hope that we finally are leaving behind the "years of the pandemic". All the visitors were impressed with the setup and operations, and I feel that we have attained our objectives of a safe operation and a Public Relations event.

We also had a few new hams joining the Club.

Special thanks to the event Chairpersons, Band Captains and Food, GOTA and PR persons. The Club owes you all their gratitude. I know that you all contributed more than a fair share of your time and money to make this a total success that will be used as an example of how Field Day should be conducted.

Speaking of scores, the results, QSO's, Bonus Points, etc., are still being tallied so we will have them ready for the next edition.

This month we plan to have our second "hybrid" General Meeting with a discussion of the Field Day activities and a presentation about portable power.

Special thanks to Tom W6ETC and Jeff KK6TRC for doing an outstanding job as Food Captains. Several members told me that the food was delicious, and this is the way to go. I look forward to an eyeball contact with you all at the next General Meeting.

Again, thanks to all.

73 DE AF6CF

NEXT GENERAL MEETING

July 15, 2022

19:00 hrs

IN PERSON at the

American Red Cross

Blood Donation Center, Santa Ana*

Speaker:

Nicholas Haban, AF6CF

Presents:

Portable Power Sources

NEXT BOARD MEETING

Saturday, July 3, 2022

SPECIAL NOTICE:

ALL OCARC Nets Remain Active!

(See page 2)

***Presentation also available on Zoom for those who cannot attend in person.**

In This Issue

2022 Board of Directors:

President:
Nicholas Haban, AF6CF
(714) 693-9778
af6cf@w6ze.org

Vice President:
Tim Goeppinger, N6GP
(714) 730-0395
n6gp@w6ze.org

Secretary:
Corey Miller, KE6YHX
(714) 322-0395
ke6yhx@w6ze.org

Treasurer:
Ken Konechy, W6HHC
(714) 348-1636
w6hhc@w6ze.org

Membership:
Bob Eckweiler, AF6C
(714) 639-5074
af6c@w6ze.org

Activities:
Ron Mudry, W6WG
(714) 840-3613
w6wg@w6ze.org

Publicity:
Tom Cowart, W6ETC
(714) 454-0571
w6etc@w6ze.org

Technical:
Steven Belasco, N1BKB
n1bkb@w6ze.org

Directors-at-Large:
Dan Violette, KI6X
(714) 637- 4632
ki6x@w6ze.org

Directors-at-Large:
Tim Millard, N6TMT
(714) 744-8909
n6tmt@w6ze.org

2022 Club Appointments:

W6ZE Club License Trustee:
Bob Eckweiler, AF6C
(714) 639-5074
af6c@w6ze.org

Club Historian:
Corey Miller, KE6YHX
(714) 639-5475
ke6yhx@w6ze.org

RF Managing Editor:
Tom Cowart, W6ETC
w6etc@w6ze.org

RF Editor for July 2022:
Tom Cowart, W6ETC
w6etc@w6ze.org

Webmaster:
Dan Violette, KI6X
(714) 637- 4632
ki6x@w6ze.org

Web Main Programmer:
Bob Eckweiler, AF6C
(714) 639-5074
af6c@w6ze.org

Assistant Web Maintenance:
Tim Millard, N6TMT
(714) 744-8909
n6tmt@w6ze.org

ARRL Awards Appointees:
Arnie Shatz, N6HC
(714) 573-2965
n6hc@aol.com

John Schroeder, N6QQ
(West Orange Co.)
(562) 404-1112
n6qq@msn.com

Monthly Events:

Membership Meetings*
Time: 7:00 PM
When: 3rd Friday of each Month
Red Cross Blood Donation Center, Tustin
**See ZOOM announcement pg.1*

Board Meetings
Time: 8:15 AM
When: 1ST Saturday of each Month
Board will handle Club business by IN-PERSON at Tom's QTH and w/ZOOM.

Field Day
See Announcements in Newsletter

Club Nets (Listen for W6ZE):

10M: 28.375 ± MHz SSB
Wed- 7:30 PM - 8:30 PM
Net Control: Corey, KE6YHX

2M: 146.55 MHz Simplex FM
Wed- 8:30 PM - 9:00 PM
Net Control: Corey, KE6YHX

75M 3.883 MHz LSB
Tue @ 8:00 PM
Net Control: Corey, KE6YHX

CATALINA AMATEUR REPEATER ASSOCIATION (CARA)
147.090 MHz (+0.600 MHz) No PL
Monday - Friday
9:00AM and 9:00PM
Prg. Director. Tom W6ETC

OCARC 2022 DUES

Membership period is:
1 January to 31 December

Individual New or Renewal:	$30.
Family New or Renewal:	$45.
Teen New or Renewal:	$15.

New Member Dues are *prorated quarterly* and **includes a badge**:
Additional Badges:[1] $ 3.
Use one of our interactive online forms to calculate current prices, join the club and/or order badges:

Online Forms / Dues & Badges

[1] $3. plus mailing costs if applicable
Dues are subject to change without notice

GENERAL MEMBERSHIP
LIVE & IN-PERSON MEETING*
July 15, 2022 at 19:00 Hrs
*Also available by zoom

COME JOIN US AT THE
American Red Cross

600 Parkcenter Drive
Santa Ana, CA 92705
George M. Chitty Building
2nd Story, Room 208

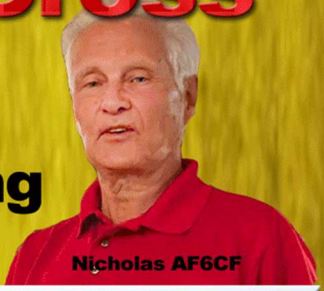

Masks are required for the unvaccinated.
Please come before 7:00 PM, as the door locks automatically to entry at that time.

Graphic by Tom W6ETC

The July meeting will feature a DOUBLE-HEADER, containing two mini programs. It includes 'a discussion with those in attendance and on Zoom about their radio interests and a presentation by Nicholas, AF6CF, OCARC President about portable power.'

ANDREW DO
SUPERVISOR, FIRST DISTRICT

Supervisor Andrew Do

Tim Whitacre from the OC Board of Supervisors and Supervisor Andrew Do visited the Orange County Amateur Radio Club (OCARC) W6ZE during their Field Day 2022 event to present the following:

Certificate of Recognition

is proudly presented to

The Orange County Amateur Radio Club W6ZE

In honor of
The critical public service role you play for our community during times of disaster
As well as during non-emergency civic events such as parades, marathons, and street festivals
Your volunteer members possess valuable skills that are a blessing and comfort to us all
I wish your club every success in all future endeavors

This 25th day of June 2022

Signed by Andrew Do
Supervisor, First District
Orange County Board of Supervisors

Additionally, the OC Supervisor Andrew Do, published a write-up about the OCARC Field Day visitation on their Facebook site. Here is the link: tinyurl.com/5n82mcw3
Let's all go to his FB site and "like" the post and maybe leave a nice comment.

The FB posting goes on to read: The OC Supervisor Andrew Do Team was there to also observe the stations and operators who have setup to operate during the National Field Day event at Ocean View School District. They (OCARC) were one of over 6,000 volunteer groups who participated in the 24-hr event.

Located in the heart of Southern California, the Orange County Amateur Radio Club was founded in 1933 and is dedicated to the advancement of Amateur Radio or "Ham Radio."

Amateur Radio operators provide a critical public service for our community during times of disaster. They are able to establish reliable communications when the normal infrastructure is offline.

Licensed by the Federal Communications Commission and trained in the art and science of radio communication and basic electronic theory, they own and maintain their own communications equipment and are prohibited by federal law from receiving payment for their services. They are trained to work with FEMA, the Red Cross, the Salvation Army, and many other entities. Their public service is easily extended to non-emergency civic events such as parades, marathons, and community festivals.

Thank you to all members for the critical public service role you play for our community during times of disaster and non-emergency civic events. For more information or to learn how you can be involved, visit their website at: https://www.w6ze.org/ .

Nicholas AF6CF President of OCARC (CENTER) holds the Certificate as presented to the OCARC

County of Orange

Certificate of Recognition

is hereby presented to

THE ORANGE COUNTY
AMATEUR RADIO CLUB
W6ZE

In honor of
The critical public service role you play for our community during times of disaster
As well as during non-emergency civic events such as parades, marathons, and street festivals
Your volunteer members possess valuable skills that are a blessing and comfort to us all
I wish your club every success in all future endeavors

This 25th day of June 2022

ANDREW DO
Supervisor, First District
Orange County Board of Supervisors

County of Orange Board of Supervisors Certificate of Recognition presented to the Orange County Amateur Radio Club W6ZE at Field Day 2022

W6ZE OCARC Board of Directors response to OC Supervisor Andrew Do:

On behalf of the Orange County Amateur Radio Club Board of Directors and our club membership, we want to thank OC Supervisor Andrew Do and his awesome team for taking the time out of their busy schedule to join our radio club at the Field Day 2022 site in Huntington Beach.

Supervisor Do office and the OC Board of Supervisors outreach to the OCARC is greatly appreciated by all those involved in this event.

THANKS to ALL of you who were involved in Field Day 2022:

We would also like to thank the efforts of our club members and other Amateur radio operators who came out and participated with us in Field Day 2022. Some groups, including some of us at W6ZE, or the OCARC members use Field Day as an exercise in emergency preparedness. Admittedly Field Day for many of us is also treated as both a competition, and a social gathering event. There's something there for everyone.

I don't know of anyone who didn't enjoy the time together at Field Day. When the opportunity presents itself again in the near future make sure you come out and be part of the adventure.

de Tom W6ETC

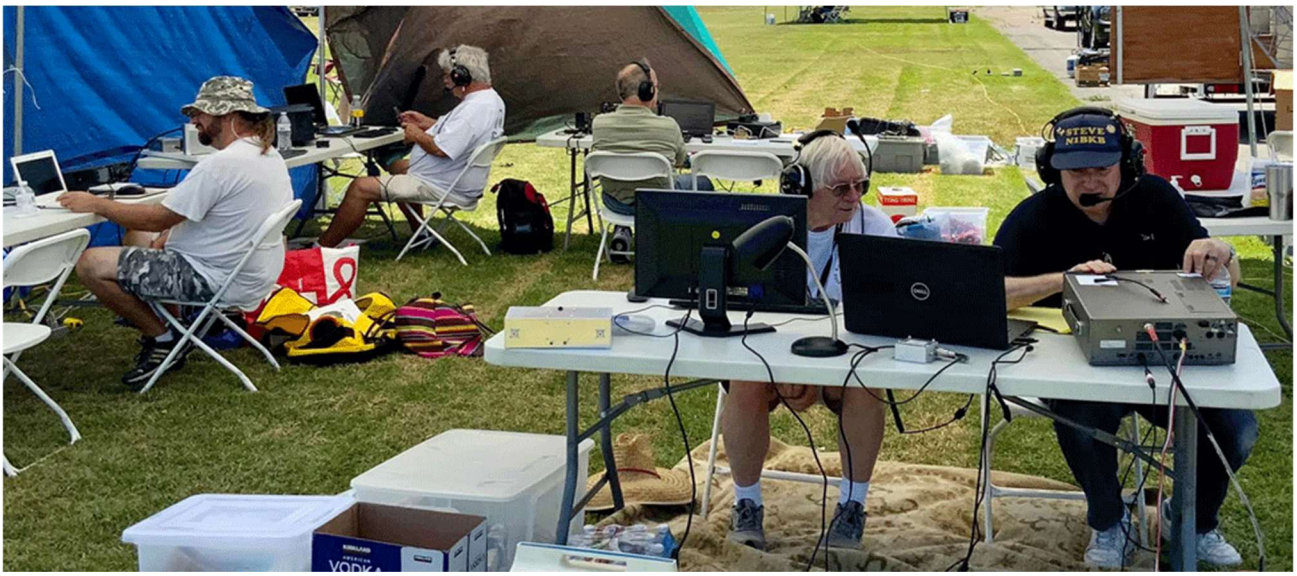

Left to Right: Endaf N6UTC; Chip K7JA; Dan KI6X; Ron W6WG; Steve N1BKB

PS, The OCARC Board of Directors would also like to THANK Neil Jessen N6VHF for contacting the OC Board of Supervisors.
Neil was kind enough to inform the OC Board of Supervisors and the office of Supervisor Do of our club members efforts towards community service. Supervisor Do office responded within days.

W6ZE PRELIMINARY
FIELD DAY 2022 RESULTS
6A Class

By Tim Goeppinger N6GP

Band	CW	Phone	Digital	Total	%
80	251	186	0	437	10
40	504	643	128	1,275	30
20	758	1,353	70	2,181	51
15	90	107	13	210	5
10	1	30	39	70	2
6	0	10	13	23	1
2	0	63	1	64	1
70	0	14	0	14	0
10 G	0	2	0	2	0
SAT	0	1	0	1	0
--	-----	---	-----	---	
Total	1,604	2,409	264	4,277	100
GOTA		67			

Total score from QSOS: 12,404

Estimated bonus points: 1,690

TOTAL 14,095

Last year this score would have put us in 7th place out of 5900 entries.

Additional points by Willy N6OKU at home toward our aggregate score:

805 QSOs for 1,660 points

"RF"

ORANGE COUNTY AMATEUR RADIO CLUB

JULY 2022

FIELD DAY SUMMARY - with COVID-19 OCARC Aggregated score listed

FOR

THE ORANGE COUNTY AMATEUR RADIO CLUB - W6ZE

by: Ken / W6HHC & Bob / AF6C

NOTE: Adjustments have not been made for duplicate contacts,and bonus points. Final scores appear in QST.

YEAR	160M SSB	80M CW	75M SSB	40M CW	40M SSB	20M CW	20M SSB	15M CW	15M SSB	12M SSB	10M CW	10M SSB	6M CW	6M PHN	2M CW	2M PHN	220 PHN	440 PHN	UHF CW	UHF PHN	ATV	RTTY/ Dig	SAT-ELLITE	GOTA	- - - - TOTAL - - - - QSO's	/	(POINTS)
2022 - W6ZE	0	251	186	504	643	758	1354	90	107		1	30	0	10	0	63	0	14	0	3	0	264	1	67	4,346	/	12,428
2022 OCARC Aggregates	0	0	0	0	0	0	805	0	0	0	0	0	0	0	0	0	0	0	0	0	0	0	0	0	805	/	1,660
2021 - W6ZE	0	104	0	462	913	274	1525	152	10		6	30	0	5	0	18	4	11	0	0	0	111	8	73	3,706	/	9,630
2021 OCARC Aggregates	0	4	1	105	163	220	207	24	2		0	0	0	0	0	26	0	3	0	0	0	265	0	0	1,020	/	3,276
2020 OCARC aggregate	0	80	7	433	682	528	291	26	0		1	1	3	21		339	14	113				1021	6	0	3,648	/	10,055
2019	0	43	34	392	566	536	322	29	0	0	0	7	0	10	0	18	3	8	0	0	0	271	6	0	2,239	/	7,032
2018	0	97	182	476	923	592	848	138	211	0	38	60	0	67	1	52	0	13	0	0	0	137	4	45	3,884	/	10,726
2017	0	0	12	449	852	262	787	0	0	0	0	0	0	25	0	51	0	0	0	0	0	91	4	50	2,583	/	6,770
2016	0	29	18	163	342	206	760	15	18	0	0	0	1	36	0	44	0	1	0	0	0	188	1	52	1,874	/	4,952
2015	0	53	121	115	507	661	1161	190	324	0	1	71	3	60	0	45	0	6	0	0	0	77	0	1	3,396	/	8,992
2014	0	111	122	756	723	1059	1113	559	382	0	57	134	25	133	0	43	0	11	0	0	0	121	23	47	5,419	/	16,214
2013	0	269	339	655	1052	895	1960	484	614	0	38	67	6	60	0	60	15	11	0	0	0	144	4	186	6,859	/	18,700
2012	0	14	51	125	78	215	735	185	330	0	0	12	1	50	0	37	5	5	0	0	0	13	0	408	2,264	/	5,634
2011	0	58	176	168	217	253	703	32	198	0	16	40	0	57	0	37	0	16	0	0	0	0	0	139	2,110	/	5,278
2010	0	0	0	240	342	223	727	49	0	0	0	0	1	96	0	32	1	7	0	0	0	0	0	160	1,878	/	4,786

We had a few VIP's visit us at Field Day. These include the ARRL Southwestern Division Director Richard J. Norton N6AA (top left); ARRL Section Manager Bob Turner W6RHK (top right); and Tim Whitacre from Supervisor Andrew Do of the Orange County Board of Supervisors.
Field Day operators are pictured at the bottom of the image by Tom W6ETC.

Field Day Chairman COMMENTS:

"2022 Field Day really brought us back to normal. Not the so-called "new normal" but a full-fledged OCARC Field Day. It felt great to be back in the mode. We had lots of participation and visitors and a fair amount of QSO's. The weather cooperated with not only a cool evening but not an excessively hot day either during the setup or tear down.

We can be glad for the efforts put forward by our operators and those who participated by planning and preparing meals, contributing equipment, and giving their time and talents. It was great being back out there doing Field Day again."

-Tim Millard N6TMT, Field Day Chairman-

GOTA participant & Jesse KB6MQY (R)

Bob AA6PW

Tom KA9FRN (L), Undetermined (CTR), Dan KI6X (R-REAR)

OCARC W6ZE Field Day 2022

Endaf N6UTC at the controls (R)

Brian AF6NA (CTR) & Nicholas AF6CF (R)

Jeff KK6TRC

Jeff KK6TRC & Jim KB6TKA

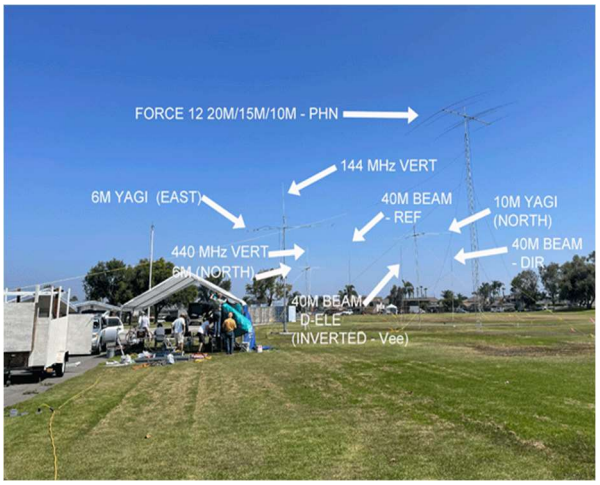

Antenna Farm

Jim KB6TKA (L) & Doug K6PGH (R)

Chip K7JA racking them up!

Huntington Beach News
Serving the community since 1904

By: Jerry Person

Published: June 27, 2022

Community News

(Reprinted with permission with some modification to original format to fit the Newsletter)

OC Amateur Radio Club holds Field Day in HB

HUNTINGTON BEACH...Calling CQ, Calling CQ...
For over a hundred years these words were sent out over the air by amateur radio "Ham" operators asking to talk to anyone who heard these words or their Morse code dots and dashes.

From the first messages sent out in the early 1900s, ham radio equipment has kept pace with the times going from the very first ham transmitters that were little more then a spark fired between two contacts with a antenna connected to it. These sparkgap transmitters connected to a telegraph key sent Morse code messages to nearby receivers.

Think of hooking up an antenna to a spark plug in your car and firing the plug with dots and dashes while listening several hundred feet away on a crystal set with headphones, that's how early wireless telegraphy began. But by the late 1910s three-element vacuum tubes and better circuits began to appear, but it was still Morse code that these operators were listening too.

By the mid-1920s Hams were able to transmit a continuous radio-frequency wave and modulate that wave with a carbon microphone that radio as we know it came along with voice instead of dots and dashes.

In the 1930s to the 1950s Ham radio operators were helping at major disasters, relaying messages from and to loved ones when telephone lines were down.

Much of this would not of come about without the help of the Amateur Radio Relay League (ARRL) of hundreds of amateur radio operators sitting nightly in their "Radio Shack" listening and talking to fellow radio operators from every country around the world thanks to the way some radio waves bend and bounce off the Ionosphere above the earth.

Last Saturday and Sunday, June 25 & 26 when Ham operators participated what they call "Field Day" when hams operators go out into parks, fields, mountains and seashores with portable equipment to see how far their call sign will reach other ham operators.

If an emergency disaster happens anywhere in the world, ham radio transmitter/receiver with their portable backup generator may be the only means of communicating with the outside world.

Members of the Orange County Amateur Radio Club (OCARC) participated in their "Field Day event" as they set up several antennas on the grounds of the Ocean View School District headquarters on Pinehurst Lane in Huntington Beach.

The first Field Day took place in 1933 and just in time for the major earthquake that hit Los Angeles and Orange counties.

Several members stayed in their tent "Shacks" all night communicating with ham operators in all states, including Alaska and operators in Canada. One operator talked to a ham operator in Japan.

"We have over 100 members in our club with some 50 here helping set up equipment and rig up the many antennas," said Nicholas Haban, President of Orange County Amateur Radio Club.

"We have one antenna that is wheeled in and can be raised to 100-feet into the air," said Haban.

Amateur Radio operators at work sending and receiving messages. The event is designed to test an operators' skills in setting up and operating radio communication equipment in situations where electrical power is limited or unavailable.

The idea is to simulate the conditions that can occur during natural disasters; earthquake, flood, fire, hurricanes and man-made.

"Hams can quickly raise a wire antenna in a tree or on a mast, connect it to a radio and power source, and communicate effectively with others," said Tom Cowart, OCARC's Public Relations Officer, callsign: Whisky Six Echo Tango Charlie (W6ETC).

The event is sponsored by the ARRL -- the national association for Amateur Radio. Cell phones, the Internet and other communications technologies have yet to replace what Amateur Radio operators can do. They have a long track record of getting the message through when all other systems fail!

Left to Right>
Mike Geoghegan KX6A (in the rear);
Bob AA6PW; James AF6N; Tim N6GP (R)

<Dan KI6X (L) Chip K7JA (R)

Huntington Beach News 18582 Beach Blvd. #236 Huntington Beach, CA 92648
Email: hbnews@hbnews.us

OCARC W6ZE Field Day 2022

Dino KX6D 100'+ Mobile Antenna Tower

Microwave Setup - Brian AF6NA (R)

Jeff KK6TRC (L) & Bob W6RHK (ARRL)

Tim Whitacre, Bob W6RHK & Brian AF6NA

A Dual Purpose Power Supply

by Nicholas AF6CF

I wanted a power supply to use around the shack, so I got a 12V 10A from eBay and decided to put it into a case with a voltmeter and powerpoles. The power supply had a trimpot to adjust the voltage, so maybe we could "crank it up" to 14.6V to charge a LiFePO4 battery.

However, the maximum voltage was about 13 volts, so after researching the Internet I found somebody that had "reverse engineered" a similar power supply.
It turns out that most all of them follow the same principle, with a TL431 voltage reference steering an optocoupler to regulate the voltage.

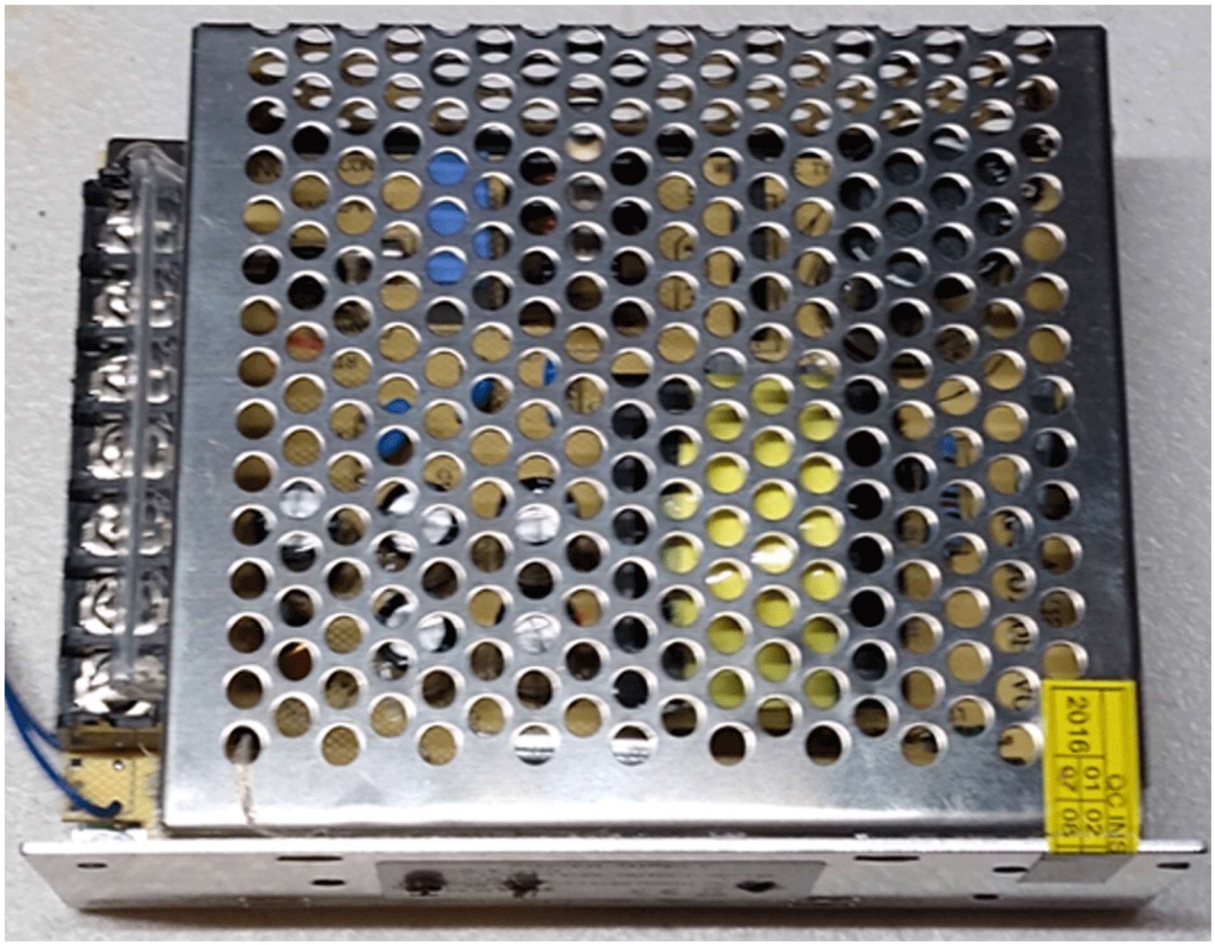

Power Supply with wires replacing the trimpot

So it was a simple matter to take the power supply apart and add two wires, one to ground and the other to the TL431. I connected the original trimpot arm to ground, so the lowest voltage was 12.9 volts. After some experimentation, I needed about 33K ohms in order to get 14.6 volts, so a 100K 10 turn trimpot was used to adjust the voltage.

Then we needed a case to place the power supply. I just had a SCSI Mac tape drive that was obsolete, so this could be the ideal housing for my project. All I needed to do is to remove the internal components and populate it with meter, powerpoles, etc.

The box is 8x6-1/2x2 inches and the tape drive was 4x6 inches, almost exactly the power supply size. Moreover, the Mac drive had an AC power plug and switch.

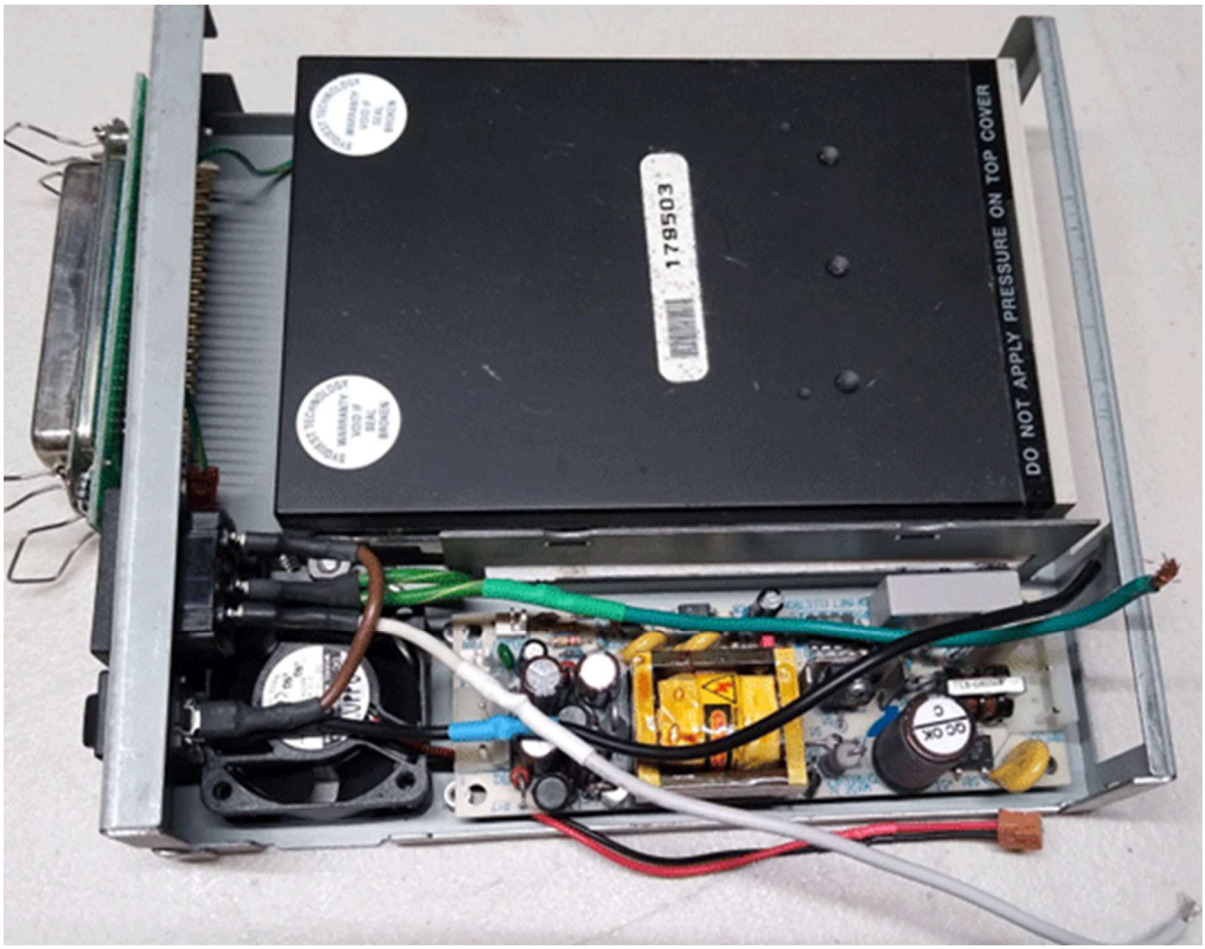

The inside of the case before component removal

The SCSI connectors were removed, leaving the power plug and switch. Also the original power supply was removed, leaving space for a little PC board with the trimpots and fan controller components. There was a small fan, which was left in place for cooling down the case if the temperature goes too high.

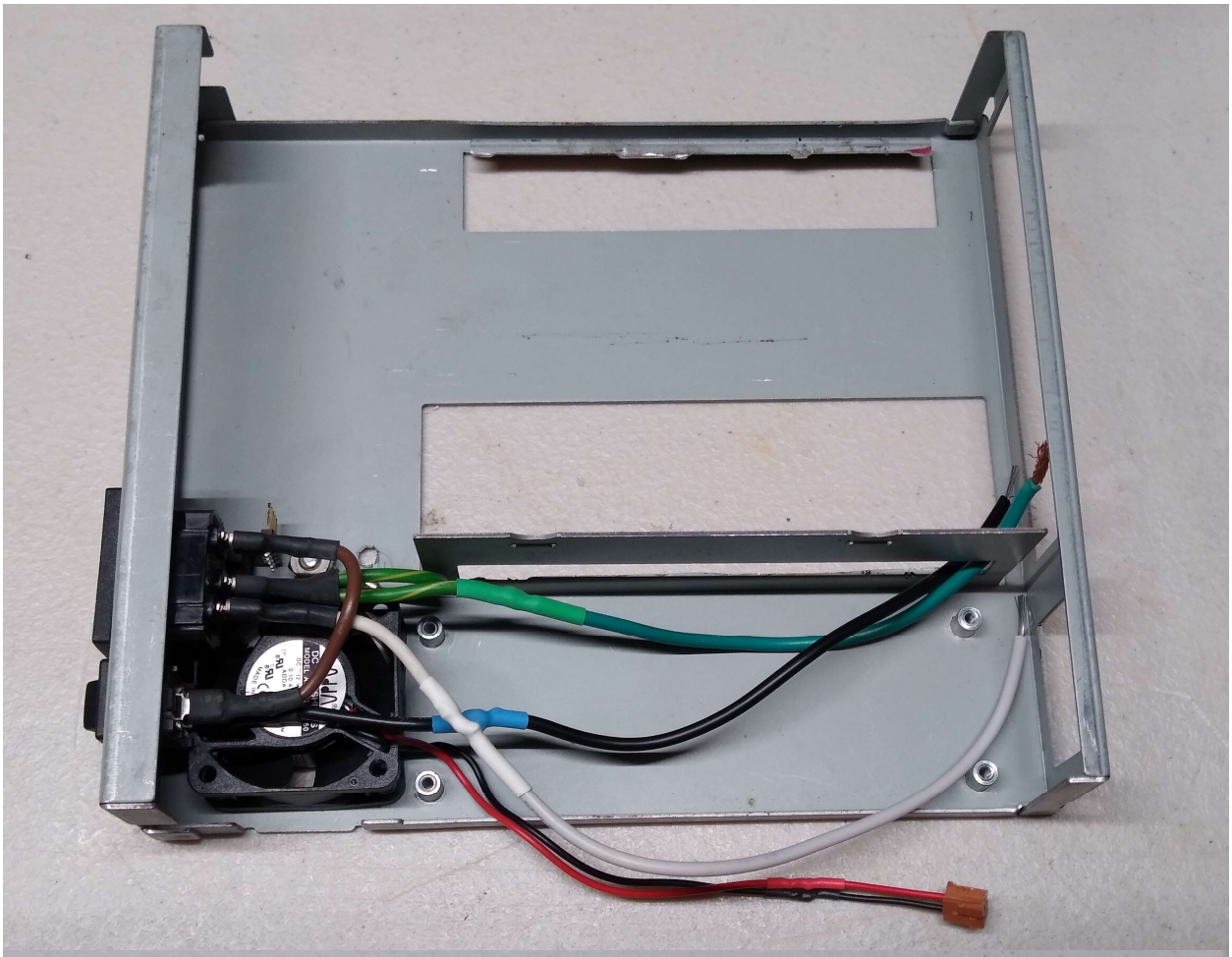

I got a Volt/Amp meter from Amazon and a powerpole connector from HRO to complete the project, along with binding posts and a few other parts.

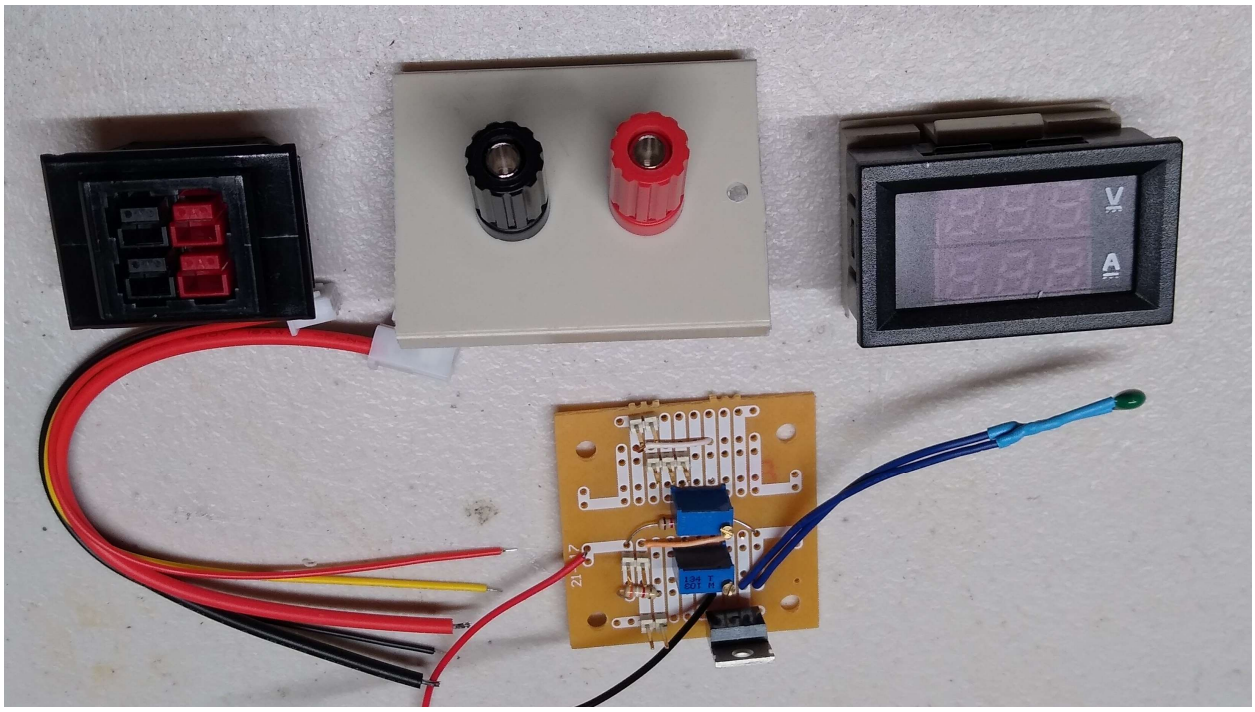

Because the computer industry uses standard measures for everything (based on the original IBM PC metrics) all the devices fit like there were made for each other.
The binding posts are mounted on a 5-1/4 inch floppy drive blank cut to size, the meter fits into the front bezel exactly and so does the powerpole in the rear panel.

The components fit in the case a little tight, but they work very well together.

I mounted the meter in the front along with the switch to go from 12.9 to 14.6 volts.

There is not much to the schematic diagram, just that the combo Volt/Amp meter had a maximum of 10 Amps, so it was a perfect match to the power supply. The most difficult part of the assembly was to open the power supply and locate the voltage reference and figure out where to connect the cable to boost the voltage because the board had most all surface mount components and it was hard to solder a wire to the miniature resistor at the TL431. The negative side of the DC power goes trough the shunt in the meter, but the fan power does not, so the meter only reads the power out to the load.

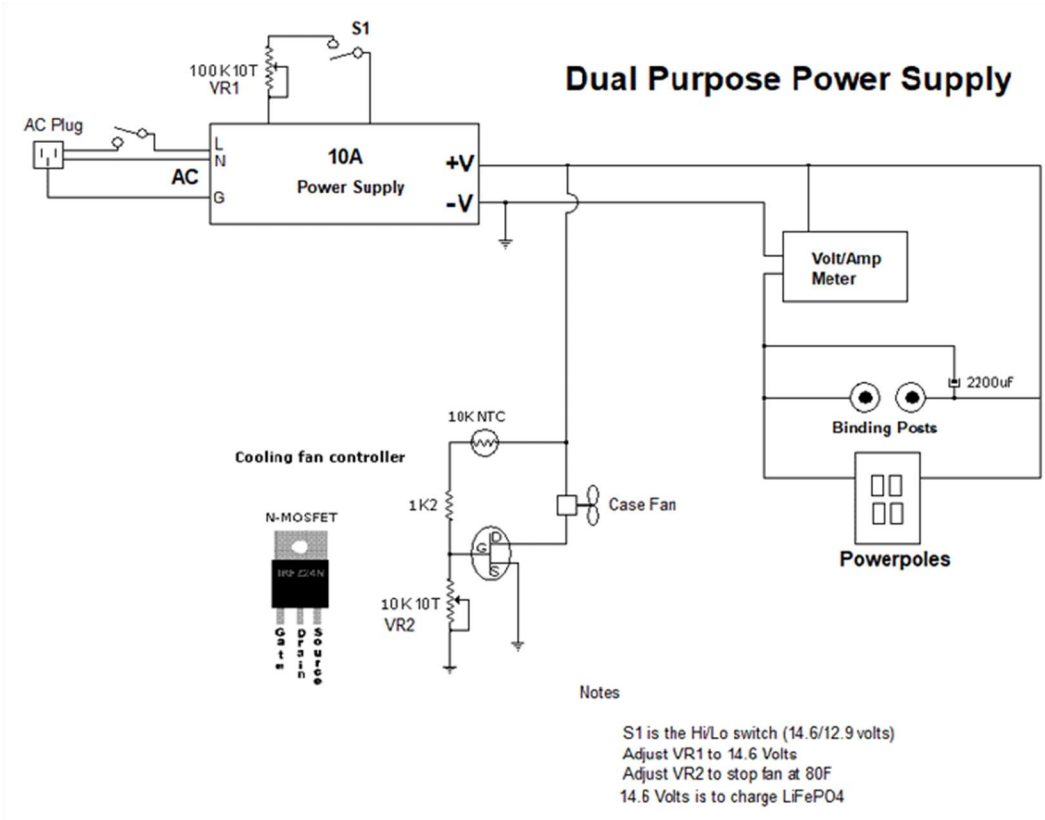

I hope this little project will help somebody to keep the "Do It Yourself" philosophy alive.

73 DE AF6CF

Heathkit of the Month #112:
by Bob Eckweiler, AF6C

AMATEUR RADIO - SWL

Heathkit SB-634
Station Control Console

Introduction:
From 1966 until 1974 Heathkit produced the SB-630 station console that combined an SWR meter, phone patch, clock and 10 minute timer into one package (See Heathkit of the Month #107)[1]. This console was designed to match the early SB-line of amateur radio equipment[2]. When Heathkit came out with the newly styled SB-104 transceiver in 1974, they also introduced the SB-634, an updated version of the SB-630, to match the new styling[3].

The SB-634 features the same basic functions with some significant improvements: The SWR meter has been replaced with a combination SWR and power meter based on the HM-102, discussed in detail in HotM #54[4]. The clock is no longer a mechanical digital-clock, but a true electronic digital clock. And, the 10-minute timer is a true digital timer with a three-digit readout. The phone patch is an improved version of the Heathkit HM-15 hybrid phone patch[5].

The SB-634 Overview:
The SB-634 comes in a larger cabinet than the SB-630, measuring 7¼"H (½" higher), 10¼"W (¼" wider) and 15¼"D (4¼"deeper); this is the same depth as the SB-614 monitor scope and the SB-644 external VFO – other accessories made for the SB-104(A).

FIGURE 1: The Heathkit SB-634 Station Console. A combination SWR Meter, Dual Range RF Power Meter, Ten Minute Timer and Phone Patch.

The front panel includes a large analog meter that may be switched to measure SWR or RF power 200W/2,000W, as well as VU-level for the phone patch (See **Figure 2**). The meter is also used as a null indicator for adjusting the hybrid phone patch balance. Behind a thick red plexiglass plate sits the clock time indicator consisting of three Beckman "Panaplex" SP352 neon two-digit, 0.55 inch high, numerical displays that show the hours, minutes and seconds. There is a gap between the minutes and seconds display; no colons are used. To the left of the clock display is the 10-minute timer display. When activated it displays three digits 0.305 inches high displaying 0–9 minutes and 0–59 seconds. The front-panel controls are shown in **Table I** and the rear connections and controls are shown in **Table II** and **Figure 3**.

When the SB-634 was released in late 1974, it sold for $179.95. The recently discontinued SB-630, that the SB-634 replaced, was selling for half that, $89.95, in the March 1974 catalog. The SB-634 Station Console continued to

Here is a link to the index of Heathkit of the Month (HotM) articles:
http://www.w6ze.org/Heathkit/Heathkit_Index.html

1. Notes begin on page 36

Heath SB-634 Front Panel

Top Left: Meter 0–100 µA, (meter resistance not given):

R.F. POWER: 0 to **2000** watts full scale.
R.F. POWER: 0 to **200** watts full scale.
SWR: 1 to **3** (at center scale) Set line at full scale.
VU: **-20. to +3** db. Wide white arc 0 to +3 db.
Figure 2 shows the meter scales.

Bottom Left (Below meter) Bank of 5 pushbutton switches

FORWARD IN / REFLECTED OUT independent switch.

(The following switches are ganged meter switches)

SWR.
2000W meter scale (POWER).
200W meter scale (POWER).
VU / PATCH Sets the meter to measure VU and switches in phone patch circuit..

Top Right: timer and clock displays (see text).

Bottom Right, Top Row:

TIMER (three position rotary switch):
OFF, VISUAL, AURAL VISUAL

PATCH GAIN (dual concentric potentiometers):
XMTR level (outside), 200 KΩ / 1500 Ω dual pot (Hi-Z output and 600 Ω output respectively.)
RCVR level (inside) 10 Ω potentiometer

SWR (potentiometer):
Marked **MIN** (ccw) and **MAX** (cw) at pot ends.

Bottom Right, Bottom Row:

Timer **RESET** (momentary pushbutton - red)

IDENTIFY (Lamp - #49 bulb - 2.0V 60 mA - w/green lens)

TABLE I

FIGURE 2: Heathkit SB-634 Meter reads Power (0–200 or 2K watts), SWR, and Phone Patch VU. The meter is not illuminated.

Heath SB-634 Rear Panel
(Refer to Figure 3)

Top to Bottom, Left to Right:

First Column:

Clock Setting Switches (Momentary slide type):
TIME HOLD
MINUTES SET
HOURS SET

Phone Patch **NULL ADJUST:**
Potentiometer, 2 KΩ, Screwdriver adjust

Phone Patch **PHONE LINE** terminals:
Jones type barrier strip, two terminal, no polarity marks

Second Column:

Phone Patch Meter Switch:
Slide With, 2-positions -**NULL, MONITOR** VU
(Switch normally remains in MONITOR position.)

Connector Strip, 4 RCA jacks (L to R):
To **SPKR**.
Speaker audio rom **RCVR**
600 Ω audio to transmitter
HI Z (high impedance) audio to transmitter.

Third Column:

RF OUTPUT, SO-239 UHF connector
Mating connector is PL-259 UHF plug.

RF INPUT, SO-239 UHF connector
Mating connector is PL-259 UHF plug.

Fourth Column:

Two Access holes for Power SWR adjustments
Hole '**C**' for SWR null adjustment capacitor C304
(Marked SWR NULL on schematic.)

Hole '**R**' for RF power calibration pot R307
(Marked CALIBRATE on schematic.)

TABLE II

sell until it was discontinued in 1983. In mid 1982 it was selling for $194.95, but with the phaseout of the SB-104A transceiver, Heath, in their Christmas 1982 catalog, was offering it at $99.95 ("…save $95.00.") See **Figure 4**.

The phone patch and SWR/Power circuits require no AC power and will work properly when the SB-634 is unplugged. When plugged in, the clock immediately comes on, but the 10-minute timer can be turned on or

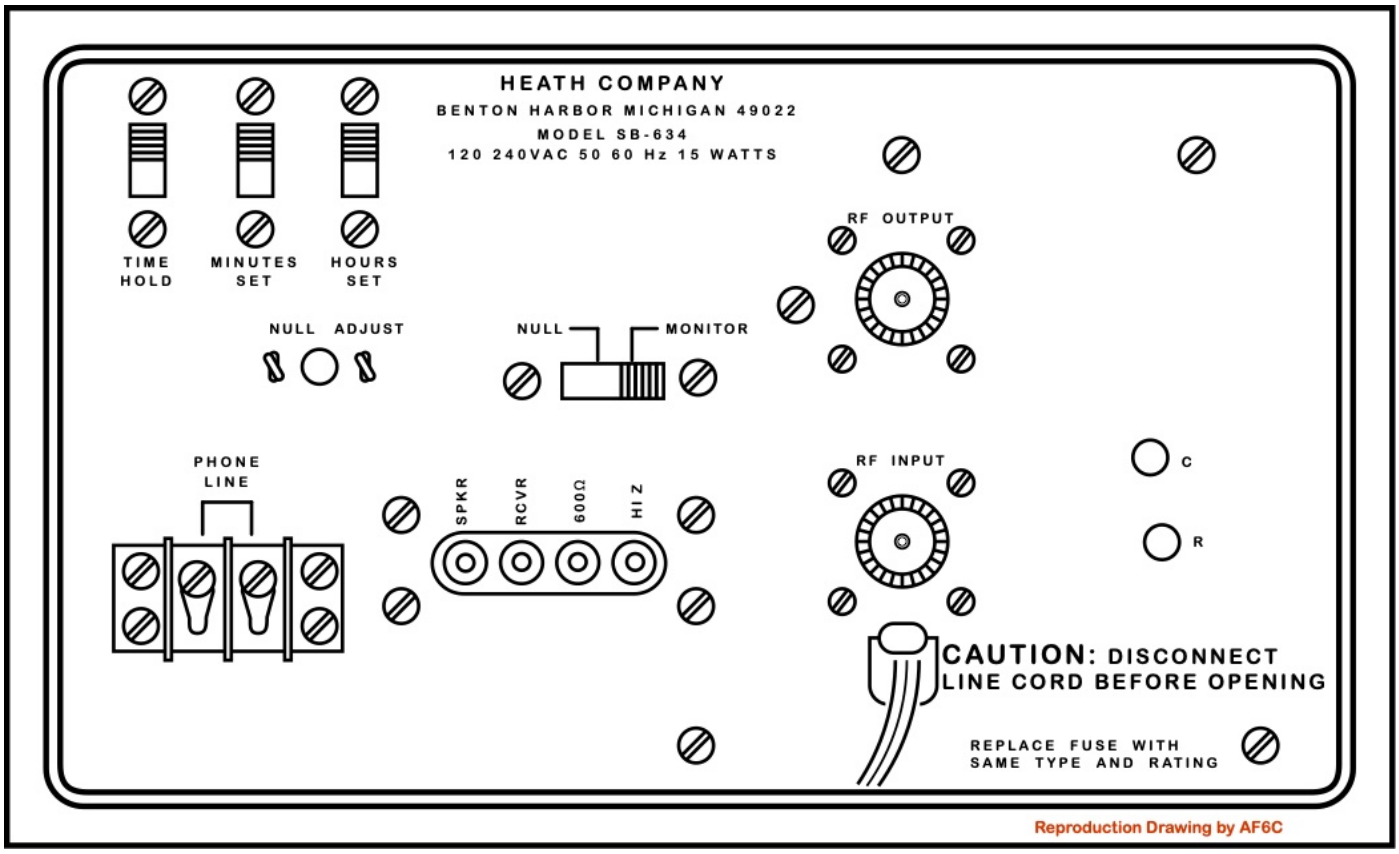

FIGURE 3: Heathkit SB634 Rear Panel Layout (Refer to TABLE II)

off by the rotary front panel **TIMER** switch. The SB–634 is compatible with 120 or 240 VAC, 50 or 60 Hz power. It draws a maximum of 15 watts[6].

The Heathkit SB-634 may be divided into five functions, four functions if the SWR bridge and power meter are combined. We will look at them individually.

<u>The 24 HOUR CLOCK</u>:
Heathkit relied heavily on their design of the GC-1005 digital alarm clock for the clock used in the station console. They both use the Mostek MK5017AA alarm clock integrated circuit. The Heath part number changed from 443-601 to 443-687; originally the chips were hand selected to solve a flicker problem, but when Heath engineers solved the flicker problem, they no longer needed to hand select the chips, hence the new part number. In the SB-634, Heathkit upgraded the clock display from the SP-752 to the SP-352 with a built-in keep-alive anode which Heath ended up not using. The displayed numbers are a little over one-half inch high (0.55") and


4 **NEW SAVINGS on Station Console**

You can save $95.00! Five-function Console features 24-hour, 6-digit clock; 10-minute ID timer w/auto reset; RF watt-meter w/200/2000 watt ranges; SWR bridge w/sensitivity control; manual/VOX-controlled phone patch. Phone patch provides at least 30 dB isolation. Input impedance is 600 ohm. 1.8 to 30 MHz. 120/240 VAC

Kit SB-634, 13 lbs. **WAS $194.95, NOW 99.95**

HDZ-63-3, 3-ft Coax w/conns., 1 lb. **4.95**

FIGURE 4: Discount ad for the SB-634 in the 1982 Xmas catalog - close to 50% off. That price remained until mid-1983 when the station console was discontinued.

bright enough to be seen in bright daylight. The SB-634 clock is hard-wired for a 24 hour display with no published option for 12 hour operation. However, the removal of D205 will allow 12 hour operation, but without any AM PM indication.

The clock accuracy is based on the power line frequency. Which in the 60's and 70's was better regulated than it is today. Hence the clock accuracy can vary significantly over a period of a few days. Operation in countries where the power line frequency is 50 Hz. requires only the addition of a diode in the open holes marked D204 on the main circuit board. D204 (1N4149) was supplied with the kit.

Setting the clock is done using three momentary slide switches located on rear panel. They are, somewhat misleadingly, marked as **TIME HOLD**, **MINUTES SET** and **HOURS SET.** TIME HOLD resets the seconds to zero and the seconds don't start counting until it is released. MINUTES SET causes the unit minutes digit to increase. When held, the digit increases by one each half-second up to nine and then back to zero <u>without incrementing the left minutes digit</u>. The HOURS SET operates as expected, incrementing the hours from 00 to 23 each half-second before cycling back to 00. To set the left minutes digit both the MINUTES SET and HOURS SET must be held simultaneously. This will cause the tens of minutes display to increase 0 to 5 before returning to zero and staring over.

Figure 5: The Heathkit SB-634 Console

Why Heathkit didn't incorporate a simple crystal oscillator for the timebase was probably a matter of cost. Though it would have made a good extra-cost option. The clock has no battery backup, and any significant interruption will cause the clock display to show all eights until reset.

With today's PIC computer-on-a-chip, and low cost GPS time receivers, it probably wouldn't be too hard to convert the clock to one of high accuracy. Some sort of external GPS antenna would be needed.

When plugged in, the clock display is on continuously. There is no way to dim or turn off the display without stopping the clock. However the display is not so bright that it would be annoying to someone trying to sleep in the radio room.

The TEN MINUTE TIMER:

FCC Part 97.119(a) requires that an amateur station identify, at a minimum, once every 10 minutes. A simple, resettable, 10 minute timer can aid in obeying this rule for people "rag-chewing" or involved in some net operations. The SB-634 has such a timer built in.

To the left of the time display is a three-digit display that is not visible when the **TIMER** switch is in the **OFF** position. Moving the TIMER switch to either the **VISUAL** or **AURAL - VISUAL** position causes the display to show with a random pattern. Pressing the **RESET** button resets the display to 000, and it starts counting each second in sync with the clock. The two right-hand digits represent seconds and each time they advance from 59 they go to 00 and the left-hand digit, representing minutes, is incremented. When the count advances from 959 it goes to 000 and the green **IDENTIFY** light illuminates for approximately a second. If the TIMER switch is in the AURAL VISUAL position a tone is also heard from the built-in speaker while the IDENTIFY light is lit. The RESET pushbutton can be operated at any time, reseting the timer to zero. This allows one to reset the timer whenever they identify prior to the full ten minutes.

The SWR and POWER METER:

Except for the meter switching, that allows the meter to be used also for the phone-patch functions, the circuitry and components are the same as found in the Heathkit HM-102 with few exceptions. The printed circuit boards are identical except for the component silkscreening, and hold the same components. The pickup coil is identical down to the eyelet that holds it in place. While the **'C'** trimmer capacitor is marked with slightly different values, they have identical part

Figure 6: Heathkit SB-634 showing smaller timer digits left of the time digits. 144 (1 minute 44 seconds into the 10 minute period.)

numbers. The front panel **SWR SENSITIVITY** control is 250 KΩ instead of 200 KΩ and lacks the pull switch function of the HM-102, which, in the SB-634, is incorporated into the switch bank below the meter. The change in value has little effect on the SWR bridge operation and was probably selected as it was a common part used in over a dozen other Heathkits. The sensing element for the SB-634 SWR Power Meter is built into the chassis and cannot be located externally like the HM-102 allows. As previously mentioned, the HM-102 was discussed in detail in HotM #54. Refer to that article for its operation and circuit description.

The HYBRID PHONE PATCH:
Like the Clock and the SWR Power Meter covered above, the Hybrid Phone Patch is based on an earlier stand-alone kit - the HD-15 which was an improved (and less expensive) version of the earlier HD-19. A significant part of the lower cost was Heathkit finding a good quality but less expensive hybrid transformer set. This set continued to be used in the SB-634. The HD-15 was also featured in an earlier article.

What makes a phone patch hybrid is its ability to keep the audio coming from the receiver from being fed to the transmitter. This capability allows VOX operation. It is accomplished by a bridge circuit that nulls out the audio being fed to the transmitter while letting it pass to the phone line.

Unlike the HD-19 which only has a Hi-Z mic impedance output, the HD-15 and SB-634 also have a low 600 Ω mic impedance output, making them compatible with most transmitters, old and new.

New in the SB-634 phone patch is what is sometimes referred to as a 'Cap'n Crunch' filter. This filter blocks any audio around 2.6 KHz., that might be created by a heterodyne, from reaching the phone line. This is a tone used by the phone company to signal on long distance calls that the party on the other end of the line has dropped the connection. The filter got the name from the plastic bosun's whistle included as a kid's toy in boxes of Cap'n Crunch cereal in the late 1960's. The whistle could create a precise 2.6 KHz tone, and "phone phreaks", used the whistle to hack the phone system. (See Sidebar).

Assembling the SB-634 Station Console:
Assembly of the SB-634 is done in four sections. First, three printed circuit boards are populated with parts: the Power Meter Circuit Board, the Main Circuit Board and the Display Circuit Board; then the Chassis is assembled and the circuit boards wired in. Near the end of assembly, testing and adjustments are done before the final assembly is completed.

The heart of the passive Power Meter Circuit Board is a small toroid transformer that is inductively coupled to the transmission line. Two small capacitors provide the capacitive coupling. The circuit board sits in a shielded enclosure. On the HM-102 a slide switch selects NORMal operation or CALibrate. In the SB-634 the switch has been replaced with a movable soldered jumper. Though the two power meter calibration adjustments are accessible through holes in the rear panel, the cabinet and the top shield must be removed to access the jumper (See **Figure 7**). Parts mounted on the power meter board have numbers in the 300s (R301, R302, etc.)

The Main circuit board contains 5 socketed ICs including the MK5017AA clock chip, 19 transistors, (Q214 mounts with a heatsink), 7 rectifier diodes, 9 signal diodes and 2 zener

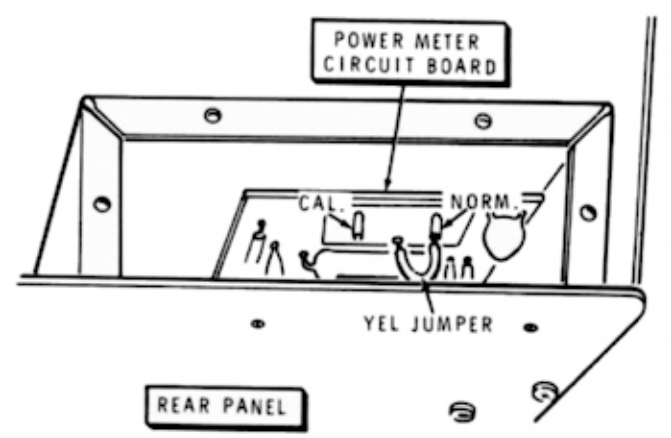

FIGURE 7: Access to the power meter CALibrate jumper is accessible after removing the shield top with the SB-634 removed from its cabinet.

diodes. with supporting resistors (46) and capacitors (18). Also mounted on the board is the IDENTIFY lamp and timer RESET momentary pushbutton switch. Numerous ribbon cables, single wires and one end of a five conductor round cable are soldered to the main board. Those wires that will be attached to the display board (29) have a bullet connector attached at their open end. Components mounted on this board have part numbers in the 200s.

Next, the Display Board is assembled. It holds 33 resistors, 3 socketed ICs, 3 socketed 2-digit displays and one socketed smaller three digit display. To ease alignment of the 16-pin clock displays, individual sockets are installed on each display pin and then the whole assembly is installed on the board and the sockets are soldered to the board. the timer three digit display has a complete display socket.

With the boards completed, wiring of the chassis begins. The phone patch circuitry does not use any of the circuit boards and is hand-wired during chassis assembly. Once the chassis parts are mounted initial wiring that doesn't go to a circuit board is completed. Next parts are installed on the rear panel and initial wiring is done as above. Next the power meter board is mounted to the rear panel, wired and its shielding installed. The rear panel is then mounted to the chassis and wired up. Next, components are mounted on the front panel; it is then mounted to the chassis and also wired in. The meter, which mounts on a bracket to the chassis side is installed and connected.

Now the display board is mounted to the front panel and the main circuit board is mounted and wired to the chassis. The ends of the ribbon cables from the main board are plugged into the display board, the line cord is connected and knobs and trim are installed.

TESTS & ADJUSTMENT:

With the TIMER switch **OFF** the SB-634 is plugged in. The clock digits should illuminate showing 8888 88. Pushing down on the **TIME HOLD** switch should cause the digits to display 0000 00, and when released, the seconds should begin counting. Next the setting functions are checked one at a time. With the clock working properly, the timer is checked next. It is turned on and RESET is checked. then the timer is allowed to proceed the full ten minutes and the IDENTIFY lamp and aural signals are confirmed.

Adjustment of the SWR balance is accomplished using a 50Ω dummy load, applying forward power at a convenient level and then using the "C" hole in the back to adjust the reflected power to zero. This is repeated as the power is increased until a good null is reached.

Heathkit offers three ways to calibrate the power function. The first uses a built in calibration circuit and requires a 40 meter signal. Once calibrated at 40 meters the calibration is good across the other HF bands. See HotM

#54 for more on this procedure. Calibration may also be done on a band other than 40 meters. It requires an RF voltmeter, or VTVM with an RF probe, to complete. Finally, a third way to calibrate the meter is given using a known calibrated power meter such as a Bird 43 wattmeter with appropriate slug.

CIRCUIT DISCUSSION:

Power Meter & Phone Patch:

The HD-15 Phone Patch and HM-102 Power Meter have been discussed before (Refer to the appropriate HotM articles for any discussion.)

Power Supply:

To run the clock and timer circuits a multiple output power supply was designed. The 120V/240V primary transformer has three secondary windings. The first winding produces 18 VDC after half-wave rectification, filtering and regulation by a 1N4166 18V 1W zener diode. This powers IC201, the clock chip. This winding is also separately rectified and fed to a voltage divider to provide a 0–14.5 volt half-sine wave to the 50/60 Hz clock chip input. Noise is filtered from this line with a 0.022 µf capacitor. This is the signal on which the clock bases its time. The second winding uses a half-wave rectifier and a C-R-C filter to produce +230 VDC for the display tubes. The third winding is full wave rectified and well regulated to provide +5 volts to the TTL ICs for the 10-minute timer.

24 Hour Clock:

Each of the six digits in the clock display have one anode lead and seven cathode leads. Each anode lead is connected to a voltage tapped down from the 230 V supply. This voltage is not enough to ionize the gas in the display tube but provides faster ignition. The clock is continually selecting, in sequence, one of the anodes, illuminating that digit. At the same time, the clock chip is activating the proper cathodes of the display digit to show the correct number. The seven cathodes each illuminate a segment. They are arranged as in **Figure 8**, and are identified as (a), through (g). This figure shows how the number seven is displayed by selecting cathodes (a), (b), and (c). By activating the proper cathodes, all the characters between 0 and 9 can be displayed. Most displays also have an eighth cathode to light a decimal, though it is not used in the

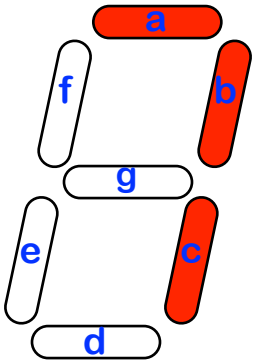

Figure 8: The seven-segments of the typical display, showing the digit 7 by illuminating segments (a), (b) and (c).

TEN DIGIT SEGMENT TABLE							
Digit	(a)	(b)	(c)	(d)	(e)	(f)	(g)
1		X	X				
2	X	X		X	X		X
3	X	X	X	X			X
4		X	X			X	X
5	X		X	X		X	X
6	X		X	X	X	X	X
7	X	X	X				
8	X	X	X	X	X	X	X
9	X	X	X	X		X	X
0	X	X	X	X	X	X	

TABLE III

clock. **Table III** shows which segments are lit for each of the digits one through zero. All six digits are displayed about every 8.5 millisecond, each being displayed for a bit over 1 mS; inter-digit blanking time is about 50 µS

The MK5017AA clock chip has eight control inputs. These also are multiplexed. There are two lines, KA and KB (pins 22 and 21 respectively) that are sensed each time digits 3, 4, 5, and 6 are enabled. Should the digit enable voltage be sensed on KA or KB, that signals an input is set. The eight inputs are shown in **Table IV**, and the schematic of the reset circuit is shown in **Figure 9.**

CAUTION: The early MK5017 data sheet contains an error. The KA and KB lines are shown reversed.

Diodes D201 through D205 isolate outputs. D204 is only installed if 50 Hz operation is needed. Diode D205 is hardwired to force 24 hour operation.

Ten-Minute Timer:

The 10-minute timer uses three 7490 TTL decade counters, and three DM8800 display drivers. The three display drivers convert the BCD output of the counters to control the seven segments of the three digit SP333 timer display. The display anodes are connected to the +230 volt supply through a voltage divider to reduce the intensity of the display, since it is not multiplexed. IC204 and IC202 count the full BCD range from 0 to 9 and back to 0. The 7490 counts on the high-to-low transition at its clock input. On the transition between 9 and zero the BCD-8 line, which is connected to the input of the next stage goes low causing the next stage to increment by one count. **Figure 10** is a partial schematic of the timer circuit, showing the counting and reset circuitry [7].

The MK-5017AA CLOCK INPUTS			
Data Sheet Name	**Heathkit Name**	**Data Line**	**Input Line ***
TS - Time Set	TIME HOLD	D6	KA
AS - Alarm Set	(not used)	D6	KB
SN - Snooze	(not used)	D5	KA
AE - Alarm Enable	(not used)	D5	KB
H**	HOURS SET	D4	KA
M**	MINUTES SET	D4	KB
24 - 24 Hour Time	none (hard wired)	D3	KA
50 - 50 Hz Line	50Hz (hard wired)	D3	KB
* SEE TEXT.	** USED TO SET HRS, 1 M, 10 M		

TABLE IV

The middle decade counter, IC203, counts the tens-of-minutes and only counts from zero to five and then resets to zero instead of incrementing to six. The 7490 resets to zero when the reset pins 2 and 3 both are high. These two reset inputs are connected to the BCD-2

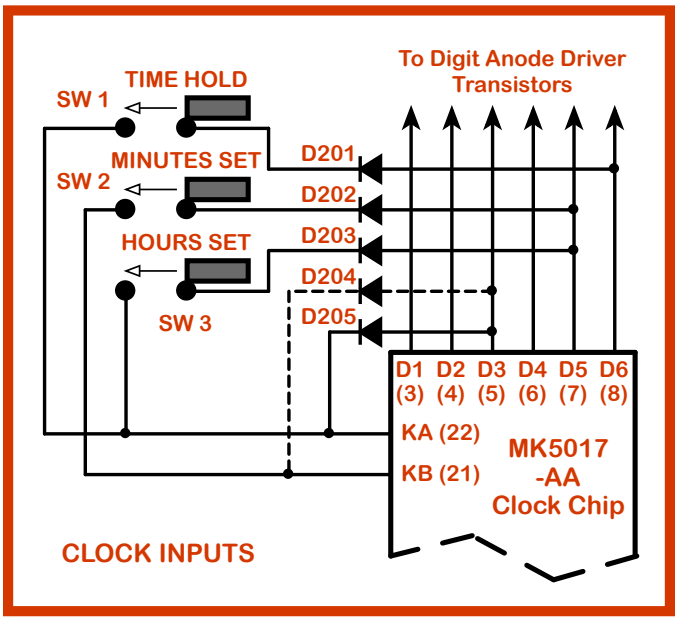

FIGURE 9: A Schematic of the five clock inputs of the MK5017AA that are used by the SB-634.

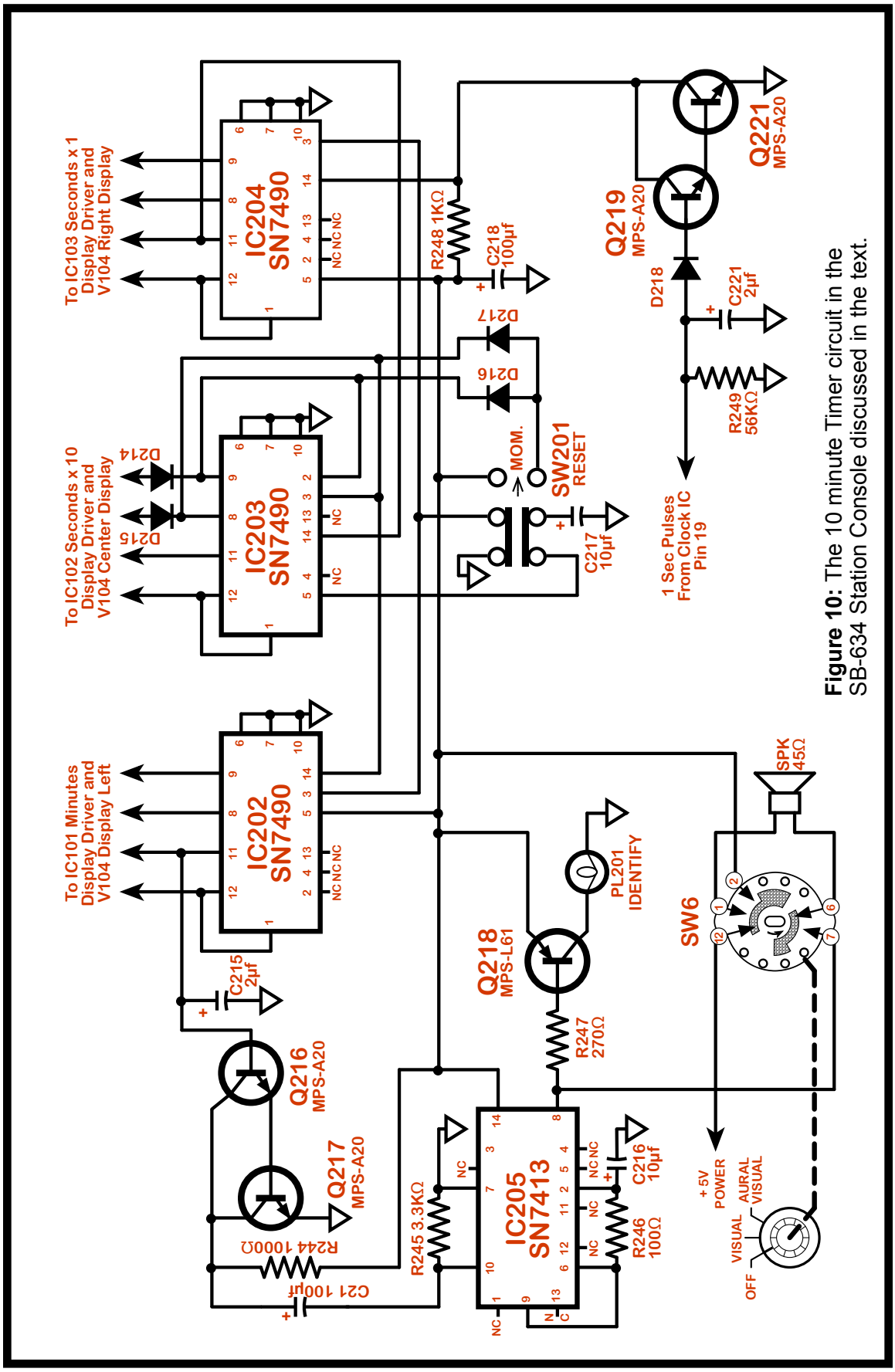

Figure 10: The 10 minute Timer circuit in the SB-634 Station Console discussed in the text.

TIMER IC203 (Counts 0 to 5)				
COUNT	PIN 12 BCD 1	PIN 9, 2 BCD 2	PIN 8, 3 BCD 4	FORCE RESET
0	LOW	LOW	LOW	NO
1	HIGH	LOW	LOW	NO
2	LOW	HIGH	LOW	NO
3	HIGH	HIGH	LOW	NO
4	LOW	LOW	HIGH	NO
5	HIGH	LOW	HIGH	NO
6	LOW	HIGH	HIGH	YES

TABLE V

and BCD-4 lines The BCD-4 line (PIN 9) is also connected to the clock input of IC202, the minutes 7490 counter chip. When the count reaches four pin 9 goes high, setting one of the reset lines high and clock input of the minutes counter IC-202. Pin 9 remains high when the count is five. When the count changes from five to six the second reset line goes high forcing IC203 to reset which drives pin 9 low, causing the minutes counter to increment. This occurs so quickly that the six is not displayed.

Timer Reset:

While it is considered bad practice, TTL inputs that are left open act as if they are high. Pin 3 of IC202 and IC204 are open and thus in the high state. Pin 2 of these two ICs connect to the RESET switch and are normally grounded though its contacts. When the RESET button is pressed these pins connect to +5 volts causing the ICs to reset.

Resetting IC203 is a little more complicated. When the RESET switch is in the normal position C217 is across the 5V supply and ground and is fully charged. When RESET is pressed, the capacitor is connected to pins 2 and 3 of IC203 through isolation diodes forcing them high for a few milliseconds while the capacitor discharges. Another pair of isolation diodes prevent the capacitor discharge from reaching the display driver IC.

Timeout Alarm:

See Figure 11 for the following discussion. IC205 is a dual four-input NAND Schmitt trigger gate. Just one input is used on gate 'a' and two inputs are used on gate 'b'. Unused inputs are open and thus high. The output of these gates are normally high, going low only when all four inputs are high. When power is first applied the voltage across C216 is uncharged so pin 2 is low and the gate output, pin 6 is high. The output from pin 6 charges C216 through R246. When the voltage across C216 reaches the trigger level, the output, pin 6 goes low; discharging capacitor C216

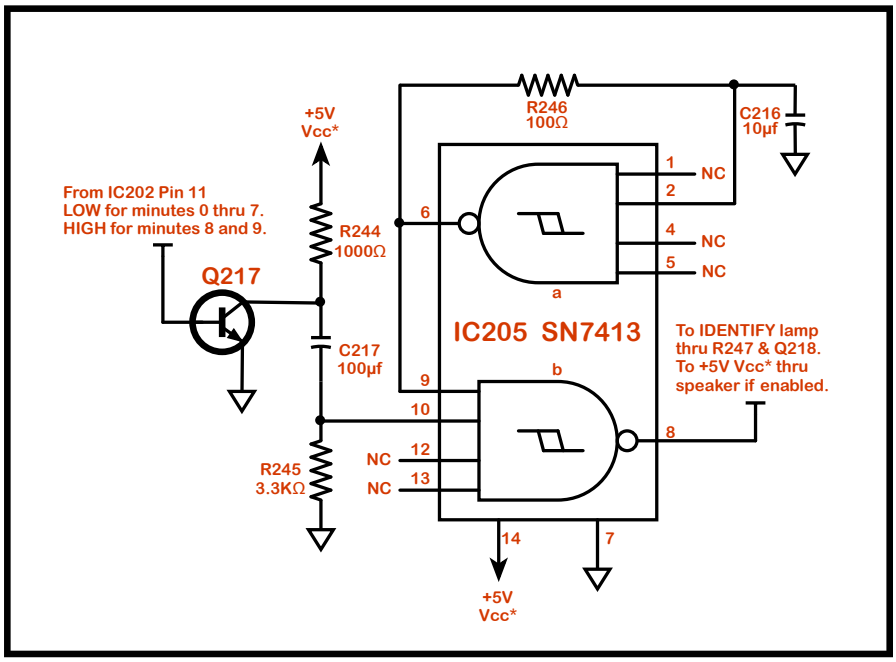

Figure 11: The 10 minute Timer Timeout Alarm from Figure 10. See text for discussion.

through R246. When the voltage drops below the Schmitt trigger level pin 6 goes high and the capacitor again starts charging. Thus there is a constant square-wave oscillation at an audio frequency occurring at pin 6 whenever the TIMER switch is not in the off position.

When the minutes counter (IC 202) is registering 0 through 7 minutes its pin 11 is low, and the Darlington pair composed of Q216 and Q217 is off, and C214 is being held charged by R244. Since C214 is charged, pin 10 of the 'b' gate is low and the gate output is high keeping Q218 off, (and if the TIMER switch is in the audible position, a high on both sides of the speaker.)

When the minute count reaches 8, IC202 pin 11 goes high turning on Q216 and Q217 which discharge C214. Pin 10 of IC205 remains low during the discharge. As long as Q217 is conducting, C214 remains discharged. IC202 pin 11 remains high during the ninth minute. At ten minutes the counter rolls over to 000 and IC202 pin 11 goes low. turning off Q216 and Q217. C214 immediately starts charging, making pin 10 of gate 'b' go high. The square wave on pin 9 now appears inverted on pin 8 where it turns on the IDENTIFY lamp and, if selected, causes the speaker to sound. The light and tone continue until C214 charges to the point the Schmitt trigger gate triggers; about one second.

The SB-634 in the Shack:

The SB-634 in the photos was purchased at one of the OCARC club auctions. One obvious problem was that the seconds display was not working. A second problem was that the rest of the display was intermittent, causing one segment in each digit of the clock not to display occasionally. The unit itself appeared well built and in good condition, other than a little dust. It cleaned up nicely except for the

Phone Phreaking

2,600 Hertz was an important tone in the worldwide telephone system in the sixties to the eighties. The tone was used by the phone system to signal that a long distance tandem was available. By calling a long distance toll-free number and, while the phone is ringing, sending the tone will cause the tandem to believe you hung up and stop the call, leaving you to connected the tandem (referred to as "seizing the tandem".) Using the proper tone codes you could then direct your call anywhere in the world, routing it from country to country or across the US and back. Numerous versions of the "Blue Box" were developed by the phreaks to create the twelve dual tones used by the phone company to send signals. Often the 2600 Hz was also built into the blue box.

One of the more famous phone phreaks used Cap'n Crunch as his alias. Ron Rosenbaum interviewed him (and others) in an October 1971 Esquire article.

Two famous "Phone Phreaks" were none other than Steve Wozniak and Steve Jobs, later to be the founders of Apple Computer. Wozniak designed a blue box that accurately produced the needed dual tones with some clever circuitry and, with Steve Jobs, produced and sold them. In one instance they ended up on the wrong end of a pistol when a buyer refused to pay. This incident is described in Steve Wozniak's autobiography "iWoz".

Continued

red transparent plexiglass filter over the displays. Evidently something had splattered on it and it was pitted. It was cleaned/polished as best possible but a trip to a plastics house is in the future.

The bad display was checked by swapping it with the minutes display, and confirming the problem was the display itself. Finding a replacement Sperry/Beckman SP352 required searching on the Internet. Surplus Sales of Nebraska has them for sale for about $50 ea.[8], but I was able to find a seller on eBay who was asking $25. His replacement display showed up in good working order.

While waiting for the display, the SWR/Power meter was checked and calibrated; its adjustment turned out to be pretty much right on. The intermittent display problem was tracked down to a damaged connection on a cable where it connected to the display board. Heathkit used small male bullet connectors (P# 432-121) that mount on the display board and mating female connectors (P# 432-120) that attach to a wire to make it easy to disconnect the wires and remove the display board as needed. Unfortunately one of the male bullet connectors had been damaged making it hard to reconnect the wire and evidently enough force had been used to break the solder connection between the connector and circuit board. This was the intermittent problem. After desoldering the connection, it was possible to MacGyver a temporary solution until a source for the bullet connector set can be found. The phone patch has yet to be checked, but should there be a problem, parts are available from an HD-15 parts unit. Besides, phone patching, once very common, has been rendered mostly obsolete by other communications techniques.

Phone Phreaking - continued

In an interview Jobs was quoted as saying:

> *"If it hadn't been for the Blue Boxes, there would have been no Apple. I'm 100% sure of that. Woz and I learned how to work together, and we gained the confidence that we could solve technical problems and actually put something into production."* – Steve Jobs

Here are a few references if you are interested in learning more about "Phone Phreaking". Note that most all control signaling for making phone connections today use "out-of-band" signaling and not in-band tones.

"Secrets of the Little Blue Box" by Ron Rosenbaum, *Esquire Magazine*, October 1971. Available online here: http://www.thestacksreader.com/secrets-of-the-blue-box-ron-rosenbaum-steve-jobs-influence/

"iWoz" by Steve Wozniak with Gina Smith (Chapters 6 and 7) ISBN 0-393-6143-4

"Basic Telephone Systems" [parts. I, II, III] by Spenser Whipple, "73 Magazine" April, May, & June 1975.

Clocks synced to the power line frequency no longer keep very accurate time, which makes this product a good candidate for the addition of either a much more accurate time base or for adding a WWVB or GPS controlled time base.

Heath of the Month:

Life has been a bit hectic lately, In the last few months, I've added new windows to the house as well as exterior paint. The ham shack is still half torn apart and too much

other stuff is taking up my time to get it back together. Meanwhile I picked up some interesting equipment that I'd like to get to. One is an early circa 1950 Heathkit SG-6 signal generator that looks in good shape. I have the capacitors to re-cap the unit and spent some time freeing up the 6:1 vernier tuning drive. Another item is a 1955 Allied Knight kit audio oscillator (Figure 10). It is an early Knight kit and doesn't even have a part number. Instead it uses the Allied catalog listing number which is "83 FX 137". This audio oscillator uses lots of electrolytic capacitors including two dual can types. Externally the kit looks pristine, but inside it is a bit sloppy. There is plenty of room inside to work so it might be a candidate for a full rebuild? I was able to find a paper manual for it in good condition. Also in the pile is a few Eico and Conar built kits that will likely be auctioned off at the October club auction.

73, from AF6C

Notes:

1. See HotM #107: Heathkit SB-630 Station Console. https://www.w6ze.org/Heathkit/Heathkit_107_SB630.pdf
2. See HotM #30: Heathkit SB-Line Overview: https://www.w6ze.org/Heathkit/Heathkit_030_SB_Line OV.pdf
3. Heathkit cleverly used a new design style that allowed the new style equipment to be close enough to be used with the older style and visa versa.
4. See HotM #54: Heathkit HM-102 RF Wattmeter. https://www.w6ze.org/Heathkit/Heathkit_054_HM102.pdf
5. https://www.w6ze.org/Heathkit/Heathkit_031_HD15.pdf
6. With the timer off, the clock alone draws a measured 4 volt-amperes.
7. The full Heathkit SB-634 schematic is available at: https://www.w6ze.org/Heathkit/Sch/SB634_Sch.pdf.
8. Surplus Sales of Nebraska: https://www.surplussales.com/ Look under Display Devices & Lamps.

Remember, if you are getting rid of any old Heathkit Manuals or Catalogs, please pass them along to me for my research.

Thanks - AF6C

New Knight Audio Generator Kit

- Latest Design
- Lower Distortion
- 600 Ohm Output
- Range: 20 cps to 1 mc.

New, Knight audio generator kit features up-to-the-minute circuit design at a money-saving price. Provides an audio frequency source for checking audio circuits of amplifiers and other high-fidelity equipment. Also excellent for checking speaker response.

SPECIFICATIONS. Frequency range: 20 cps to 1 mc in 5 ranges. Output voltage: 10 volts to high impedance, ±1 db to 200 kc. Generator impedance: 600 ohms. Distortion: Less than .25% from 100 cps through the audible range; less than 1% when driving 600 ohm load at maximum output. Step attenuated output continuously variable between steps.

CIRCUIT. Latest circuit as developed by U. S. Bureau of Standards. Uses 6BA6 Wien bridge-type stable oscillator, 6CL6 buffer-amplifier and 6CL6 cathode follower output. Rectifier is type 6X4. For operation from 105-125 v. 50-60 cycles AC.
Gray and green metal case, 8½x11x7½". With all parts, tubes, precut leads, solder and step-by-step instructions. Shpg. wt., 17 lbs.
83 FX 137. *Available December 1, 1954.* NET.....31.50

Figure 10: Allied 83 FX 137 Audio Generator ad from the 1955 Allied Radio catalog

Upcoming Activities:

July

- **IARU HF World Championships**: 1200 UTC Saturday July 9 through 1200 UTC Sunday July 10.
- ***CQ WW VHF**: 1800 UTC Saturday July 16 through 2100 UTC Sunday July 17.
- ****North American QSO Party / RTTY**: 1800 UTC Saturday July 16 through 2100 UTC Sunday July 17.
- **RSGB IOTA Contest**: 1200 UTC Saturday July 30 through 1200 UTC Sunday July 31.
- **ARS Flight of the Bumblebees**: 1700 UTC through 2100 UTC Sunday July 31.

August

- **10-10 International Summer Contest, SSB**: 0001 UTC Saturday August 6 through 2359 UTC Sunday August 7.
- ****North American QSO Party / CW**: 1800 UTC Saturday August 6 through 0559 UTC Sunday August 7.
- ****North American QSO Party / SSB**: 1800 UTC Saturday August 20 through 0559 UTC Sunday August 21.
- **W/VE Islands QSO Party:** 1200 UTC Saturday August 27 through 0300 UTC Sunday August 28.

State QSO Parties:

- **Maryland-DC QSO Party**: 1400 UTC Saturday August 13 through 0400 UTC Sunday August 14.
- **Hawaii QSO Party**: 0400 UTC Saturday August 27 through 0400 UTC Sunday August 29.
- **Ohio QSO Party**: 1600 UTC Saturday August 27 through 0400 UTC Sunday August 28.
- **Kansas QSO Party**: 1400 UTC Saturday August 27 through 2000 UTC Sunday August 30 and 1400 UTC through 2000 UTC August 28.

Repeating Activities:

- **Phone Fray** Every Tuesday night at 0230Z to 0300Z
- **SKCC** Weekend Sprintathon (Straight Key CW) on the first weekend of the month after the 6TH of the month. 1200 Sat. to 2359Z Sunday.
- **SKCC** Sprint (Straight Key CW) 0000Z to 0200Z on the 4th Tuesday night (USA) of the month.
- **CWops** Every Wednesday 1300 UTC to 1400 UTC 1900 UTC to 2000 UTC and Thursday 0300 UTC to 0400 UTC
- **K1USN Slow Speed Test:** (CW, 20WPM Max.)

Every Friday 2000 UTC to 2100 UTC
Every Sunday night at 0000 UTC to 0100 UTC Monday

Repeating Activities continued:

- **ICWC Medium Speed Test:** (CW, 25WPM Max. Every Monday 1300 UTC to 1400 UTC 1900 UTC to 2000 UTC and Tuesday 0300 UTC to 0400 UTC

OCARC Club Nets:

- **75 Meter Net:** Every Tuesday night at 8:00 pm to 8:30 pm Local Time. SSB 3.883 MHz
- **10 Meter Net:** Every Wednesday night at 7:30 pm to 8:30 pm Local Time. SSB 28.375 MHz
- **2 Meter Net:** Every Wednesday night at 8:30 pm to 9:30 pm Local Time. FM Simplex 146.55 MHz

Other Nets:

- **Catalina Amateur Repeater Association Net-AT-9**
  Wellness & Support Net
  Weekly Monday thru Friday
  9:00 am and 9:00 pm Local Time
  147.090MHz (+600 MHz) No PL
  224.420 MHz (-1.600 MHz) PL 110.9
  Echolink Node: *CATALINA*
  Allstar Node#: 51597
  Facebook: CARA Net@9
  Tom W6ETC Program Director

* Indicates club entries are accepted
** Indicates team entries are accepted
Note: When submitting logs for ARRL Contests indicate your club affiliation as "Orange County ARC"

Do you have a favorite Amateur radio activity you would like to see added to this column?
Send an email to *Ron W6WG,* Editor of RadioActivity at: w6wg@w6ze.org - Please include your contact information (name, call sign, email and phone), a link (if at all possible) as posted and any background information that might be helpful.

Net@9
AMATEUR RADIO WELLNESS & SUPPORT
Catalina
Amateur Repeater Association
COME JOIN US
9 AM & 9 PM Monday – Friday on CARA Repeaters:
2M: 147.090 MHz (+0.600 MHz) No PL and
1.25M: 224.420 MHz (-1.600 MHz) PL 110.9 repeaters.
Also available on EchoLink node *CATALINA*

Field Day 2022

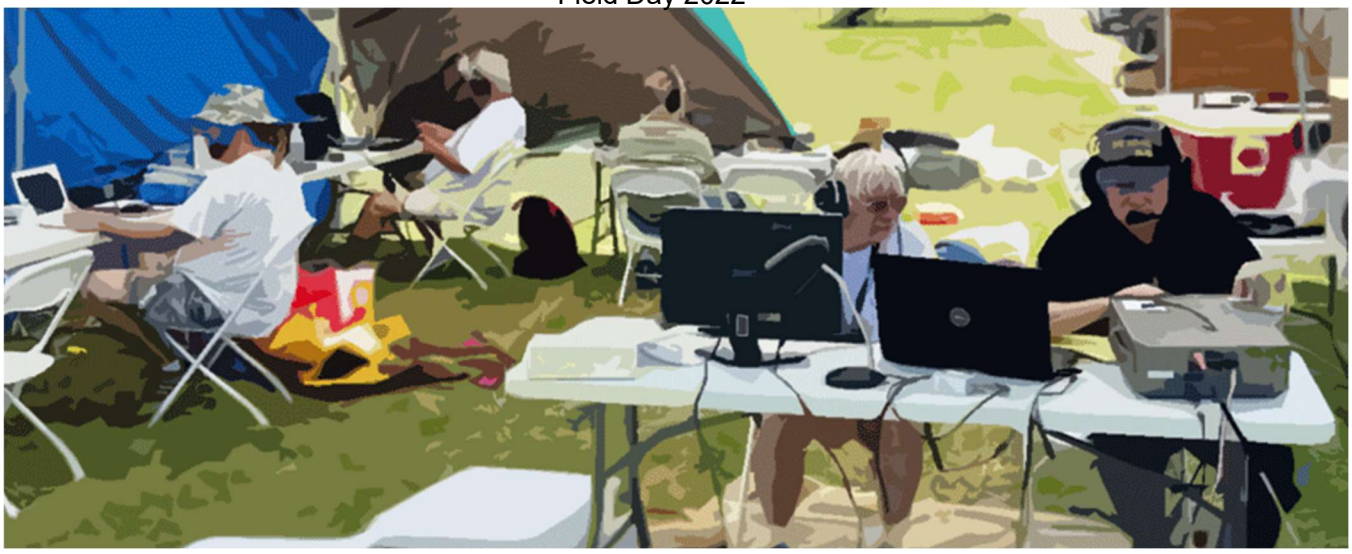

NEW OCARC Member Q&A

image by Tom W6ETC

The OCARC New Member Q&A is a new feature to help introduce our newer members, learn about how they got interested in amateur radio, why they joined OCARC and what their interests are as an amateur operator.

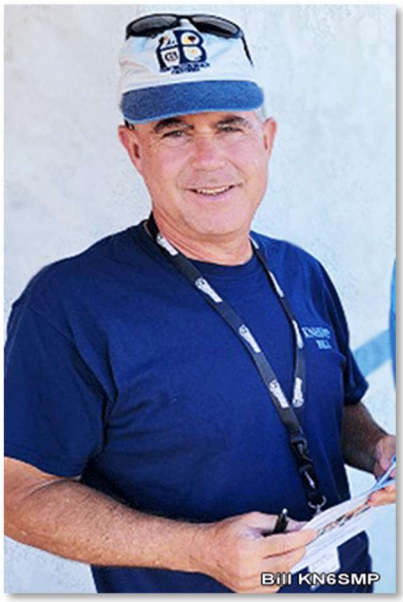

This month we "interview" Bill, KN6SMP.

<u>Can you tell us something about yourself?</u>
I'm married with one son, age 19, live in Irvine and work as an attorney for the State Compensation Insurance Fund.

<u>How did you become interested in amateur radio?</u>
Going back to my Radio Shack walkie talkies and my old Zenith transistor AM radio, I've always has an interest in radio. Most recently, a presentation at a local service organization to which I belong, the Exchange Club of Irvine, by Glenn, K6TKR, reignited my interest in radio.

<u>What has been your amateur radio involvement so far?</u>
In January 2022 I received my Technician license and joined CARA, whose 2-meter repeater I had been listening to for a while. Then I upgraded to General in May 2022. Based on great feedback about the organization by Tom, W6ETC, and Jim, KB6TKA, I joined OCARC in June 2022.

<u>On equipment and antennas are you presently operating?</u>
I use my Yaesu FT-60 for pedestrian and auto mobile, using a 15" Diamond SRH77CA and Comet M24M Mag Mount, respectively. At home I have a temporary outdoor setup using a Yaesu 2980 with a second Comet M24M Mag Mount.

<u>Describe your current and future interests in amateur radio.</u>
I enjoy participating in VHF Nets and QSOs. I plan to work on a more permanent setup for both my mobile and home "shack." I have received many recommendations for antenna options at my condo which, of course, includes an HOA, so stay tuned for that. Once my VHF set-ups are squared away, I would like to start "dabbling" into some HF. I also think it would be fun to get minimally competent using CW, as well.

OCARC BOARD MEETING MINUTES 2022-07-02

The seventh Board Meeting of the year was in-person, and ten board members attended on Saturday, July 2, 2022, at Tom W6ETC's QTH in Tustin. The meeting was called to order by club president, Nicholas Haban AF6CF at 8:10 AM PDT. All ten (10) directors were present for a quorum, including the three (3) who attended by Zoom. We had one visitor, Jim KB6TKA. There were seventeen (17) topics brought to the board this morning, including three (3) Director Reports and fourteen (14) agenda items. One (1) motion was carried, adjournment.

Fig 1 – All ten (10) Board Directors were present.
Three directors attended by Zoom, and one guest in-person.

Director Reports
Nicholas AF6CF calls for director reports.

-Treasurer: Ken W6HHC reports our income since the beginning of the year totals $3,454. We have outflows totaling $2,000, for a net increase of $1,454 [See page 45 - editor].

-Activities: Ron W6WG reports he is in the process of reserving the restaurant room for the Christmas Party.

-Membership: Bob AF6C reports the membership is at 99, including the Honorary Members with one SK.

Old Business
•Newsletter Editors

July:	Tom W6ETC
August:	Tim G. N6GP
September:	Tim M. N6TMT
October:	Corey KE6YHX
November:	--open to volunteers--

•General Meeting Programs

July: Nicholas Haban AF6CF presents:
"An Advanced Battery Box and Ham Radio Discussion"
August: —to be determined—
September: Edison Fong WB6IQN presents: "J-Pole Antennas"
October: Club Auction
November: —to be determined—

•PayPal Account Ownership

This item is tabled indefinitely.

•Old Generator Plans

Bob AF6C reports the generator maintenance is in-progress.

•Summer Field Day 2022 Report

-Nicholas AF6CF reports Field Day was a successful activity and we had many visitors.

-The Field Day chairman reported some notes for next year's Field Day Events:

- Station Signs
- OCARC Banner for Site
- Welcome Booth with brochures and sign-in sheet
- Printed Operating Schedules for Stations
- Propane Tanks x3 for Generator
- Tent Contract and Bids
- Lights for Tents and Tables

•Equipment Donations

-Steve N1BKB reports he has three complete transceiver stations available:

1. Kenwood TS-930 –antenna tuning and noise filter difficulties
2. Kenwood TS-430 –excellent shape
3. Kenwood TS-520 –needs repair

The board decides to advertise and sell the TS-930. It has no working built-in antenna tuner. The other two are already planned for.

•American Red Cross Meeting Location, Zoom Access

There were several equipment problems, but overall it went very well.

New Business

•Field Day Cost Overrun

The board consensus is that the club should pay for any cost overruns. The result: No cost overruns.

•Opportunity Drawings

A quarterly budget of $100, and a minimum of four drawings per year, is approved by the board.

•TRW Swap Meet Plans

Volunteers for the TRW Swap Meet are needed, and three board members accept. There are many items that need to be sold.

•Annual October Auction Resuming

The Club Auction is moving forward, and arrangements will be made.

•Christmas Party Plans
Ron W6WG reports the Christmas Party is planned for Friday, December 9, at Mimi's Cafe. It is in the arrangement process.

Good of the Club
-Our social media needs better search engine visibility.

Show-and-Tell
-Our 90th Anniversary is coming up, and Tim G. N6GP has an insulated drink glass as an inexpensive promotional product option.

Adjournment
A motion to adjourn is made, seconded, and carried at 9:15 AM PDT.

--Respectfully submitted by Corey KE6YHX, OCARC Secretary

Vijay NA6VJ (CTR) Brian AF6NA (R)

OCARC GENERAL MEETING MINUTES 2022-06-17

The Sixth General Meeting of the year, and the first in-person General Meeting since the pandemic, was hybrid with Zoom on Friday, June 17, 2022. The meeting was called to order by club president, Nicholas Haban AF6CF at 7:06 PM PDT. There were thirty-one (31) members, guests and visitors present, with twenty-six (26) in-person including our speaker, and five (5) by Zoom.

The OCARC first "in person" General Meeting in more than two years!

Pledge of Allegiance
There is no American Flag present for the Pledge of Allegiance.

Introductions
Nicholas AF6CF starts the attendee introductions. All thirty-one members and visitors introduce themselves.

Meeting Presentation
Nicholas AF6CF turns the meeting over to club vice president Tim Goeppinger N6GP. Tim introduces Chip Margelli K7JA, presenting "ARRL Field Day 2022."

The presentation ends with a round of applause. Thank you, Chip, for another informative and encouraging presentation.

•Questions and Answers
Chip K7JA takes questions from the audience.

-A member asks for our Field Day class and section. It is 6A ORG.
-Phonetics for our mistakable section and reading the rules prior to Field Day are recommended.
-The weather forecast and solutions for such conditions are discussed.

Field Day 2022
The main topic for the General Meeting tonight is ARRL Field Day 2022 planned for the site at Ocean View Elementary in Huntington Beach.

-Field Day Co-Chair Tim M. N6TMT covers the arrangements for Field Day with the Band Captains and participants.

-Tom W6ETC goes over the Field Day food arrangements. Jeff KK6TRC and he will provide sandwiches and freshly cooked hamburgers with sides on Saturday, and fresh pancakes, eggs, hash browns, sausage and bacon on Sunday morning. Drinks such as coffee, tea and orange juice will also be offered. Treasurer, Ken W6HHC, passed a Food Donation Can around during the meeting. The club suggested $30/weekend (for three meals) or $10/meal. {treasurer's note: $535 was collected during the meeting]

Business Meeting
Club president, Nicholas AF6CF starts the business meeting at 8:19 PM PDT. There were ten (10) board members present for a quorum. Six (6) topics were brought to the board tonight, including two (2) Director Reports and four (4) discussions. One (1) motion was carried, adjournment.

•Director Reports
Nicholas AF6CF starts the Director Reports.

-Membership: Bob AF6C reports our membership is now at 94 members.

-Publicity: Tom W6ETC reports we now have the new club brochures and a brochure stand for HRO. We thank HRO for allowing us to provide these.

Good of the Club

SK
Clayton D. Brown N6CDB
Clay passed away suddenly three weeks earlier.
•••-•-

-The Anaheim HRO is changing management as of July 1, 2022. Janet KL7MF is retiring from her managing position at HRO. Rob Ferrero Jr. W6KR will be the new manager.

-Ron W6WG is making arrangements for the Holiday Party scheduled for December 9.

-Ron is also planning to test his new homebrew band-stop filter for Field Day 40m and 15m CW.

Ask the Elmer
There are no items for Ask the Elmer.

Adjournment
A motion to adjourn was made, seconded and carried at 8:33 PM PDT.

--Respectfully submitted by Corey KE6YHX OCARC Secretary

OCARC Cash Flow - Year to Date

1/1/2022 through 6/29/2022

Category	1/1/2022-6/29/2022
INFLOWS	
Donations - FD Food	704.00
Dues, Family (PayPal)	128.82
Dues, Membership	360.00
Dues, Membership (PayPal)	2,261.82
TOTAL INFLOWS	**3,454.64**
OUTFLOWS	
Field Day - Propane	73.22
Field Day Equipment	20.00
Field Day Food	758.05
Field Day Rental - Tent	500.00
Publicity	37.64
Storage of Equipment - Ann Millard	250.00
Web Site Hosting	123.95
WFD	26.68
WFD - Food	17.90
WFD - Propane	43.06
WFD Rental - Tent	150.00
TOTAL OUTFLOWS	**2,000.50**
OVERALL TOTAL	**1,454.14**


Various Images of OCARC Field Day 2022
Doug K6PGH
Doug K6PGH
Doug K6PGH
Doug K6PGH
Nicholas AF6CF
Doug K6PGH
Doug K6PGH
Doug K6PGH